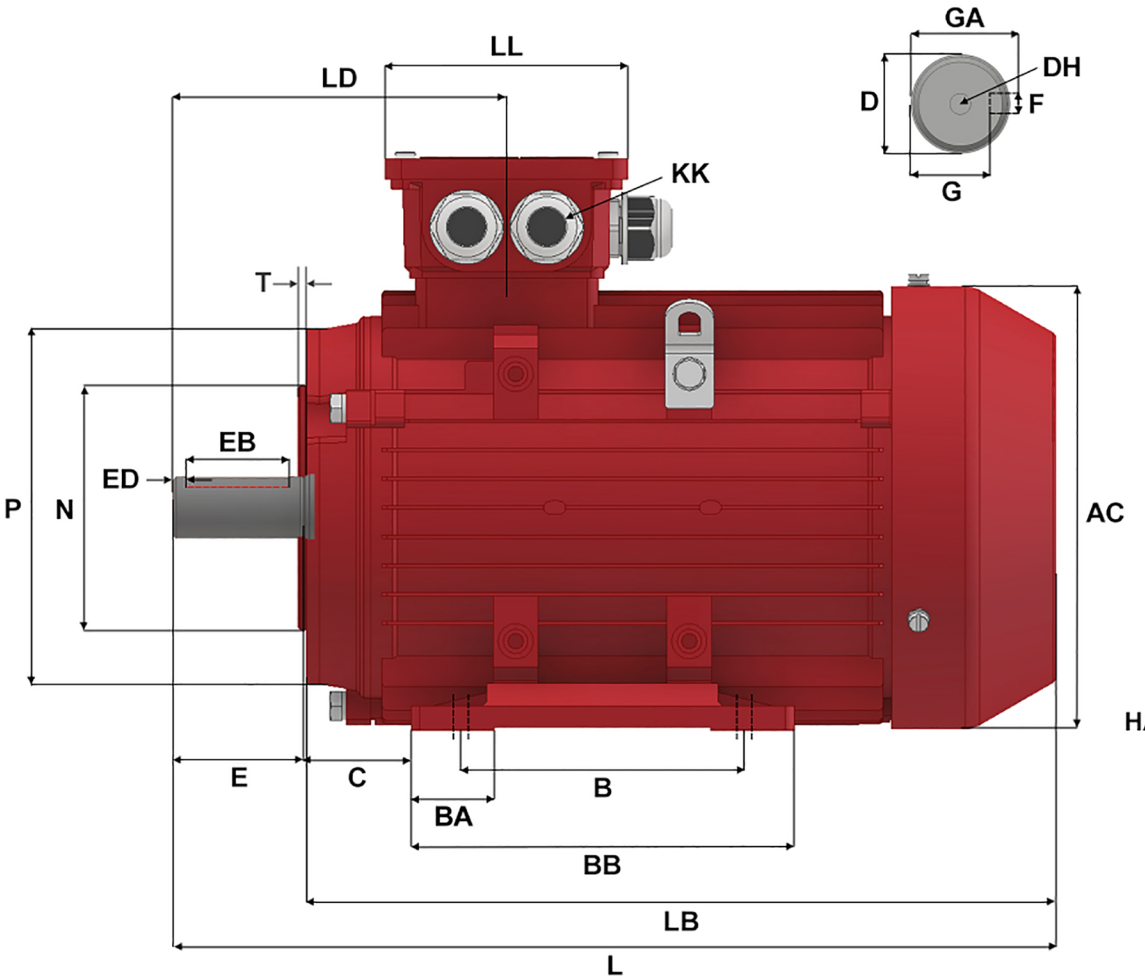

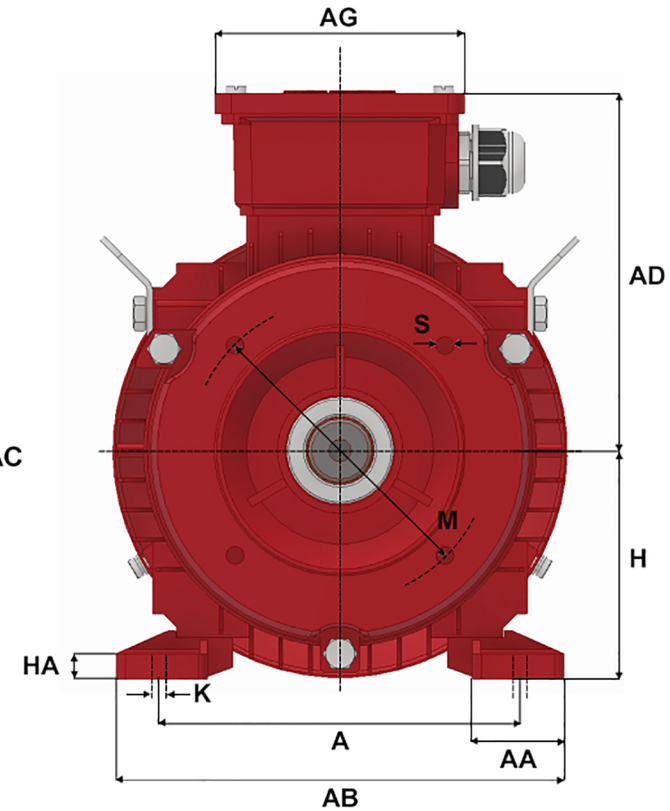

Version: 1JLEM			Revised: 09-11-2019			HP	RPM	FRAME	ENCLOSURE	IJA132M3-2-B34A		
Customer is responsible in determining that Max Motion product will fit/perform suitably in the intended application						20	3530	132M	TEFC			
A	B	C	D	E	F	G	H	K	L	M	N	P
216	178	89	38	80	10	33	132	12 X 16	485	165	130	200
S	T	AA	AB	AC	AD	AG	BA	BB	DH	EB	ED	GA
M10	3.5	51	262	258	188	117.5	46	224	M12 X 28	65	7.5	41
HA	KK (1)	KK (2)	KK (3)	LB	LD	LL						
15	M32 X 1.5	3/4" NPT	M16 X 1.5	405	180	117.5						